KUS-M18 Ultrasonic Sensor (PTFE)

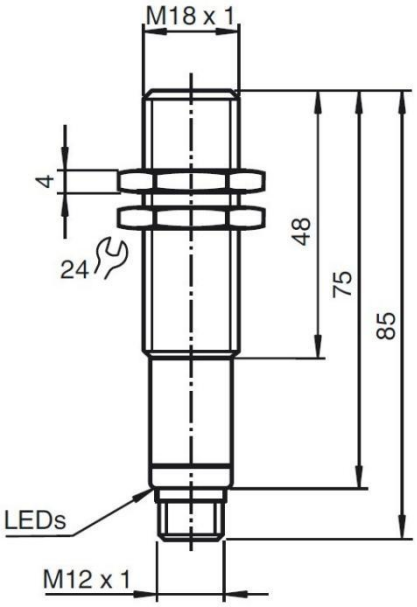

1. Feature

☆ Measuring window adjustable
☆ Program input
☆ Small unusable area

2. Electronic interface and signals definition

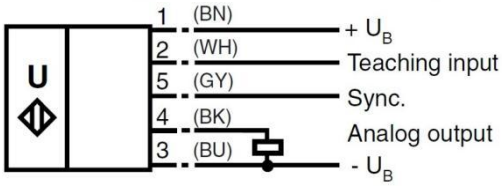

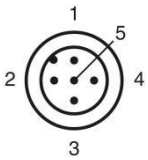

V15 Connector

3. Parameter

General specifications

Sensing range	70 ... 1000 mm
Unusable area	0 ... 70 mm
Standard target plate	100 mm x 100 mm
Transducer frequency	approx.255 kHz
Response delay	approx.100 ms

Indicators/operating means

LED blue	Power on
LED yellow	Indication of the switching state
	Flashing: Program function, object detected
LED red	Permanently red: Error
	Flashing: Program function, no object detected

Electrical specifications

Operating voltage U_B	10 ... 30 V DC, ripple 10 %SS
No-load supply current I_0	⩽ 45 mA

Output

Output type	1 analog output 4…20mA
Resolution	0.35 mm at max. sensing range
Deviation of the characteristic curve	± 1 % of full-scale value
Repeat accuracy	± 0.1 % of full-scale value
Load impedance	0...300 Ohm
Temperature influence	± 1.5 % of full-scale value

Ambient conditions

Ambient temperature	-25 ... 70 °C (-13 ... 158 °F)
Storage temperature	-40 ... 85 °C (-40 ... 185 °F)

Mechanical specifications

Connection type	Device connector M12 x 1 , 5-PIN
Protection degree	IP67
Material	Housing: **PTFE**
	Transducer: epoxy resin/hollow glass sphere mixture; polyurethane foam
Weight	60g

4. Description of Sensor Functions

Adjusting the evaluation limits

The ultrasonic sensor features an analogue output with two teachable evaluation limits. These are set by applying the supply voltage -UB or +UB to the TEACH-IN input. The supply voltage must be applied to the TEACH-IN input for at least 1 s. LEDs indicate whether the sensor has recognized the target during the TEACH-IN procedure. The lower evaluation limit A1 is taught with -UB, A2 with +UB.

Two different output functions can be set:

1. Analogue value increases with rising distance to object (rising ramp)
2. Analogue value falls with rising distance to object (falling ramp)

Evaluation limits may only be specified within the first 5 minutes after
Power on. To modify the evaluation limits later,
the user may specify the desired values only after a new Power On.

Characteristic response curve

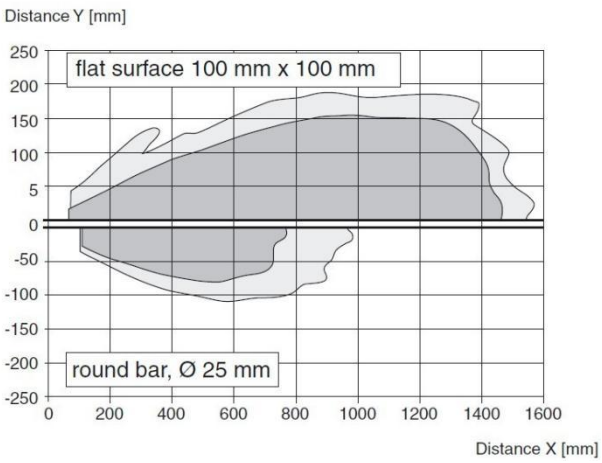

TEACH-IN rising ramp (A2 > A1)

- Position object at lower evaluation limit
- TEACH-IN lower limit A1 with - UB
- Position object at upper evaluation limit
- TEACH-IN upper limit A2 with + UB

TEACH-IN falling ramp (A1 > A2):

- Position object at lower evaluation limit
- TEACH-IN lower limit A2 with + UB
- Position object at upper evaluation limit
- TEACH-IN upper limit A1 with - UB

Programmed analogue output function

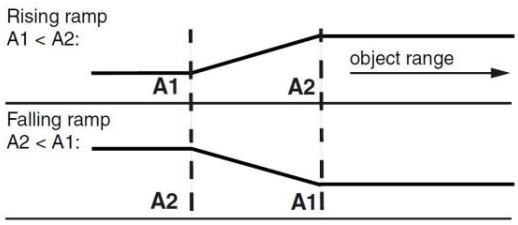

Default setting
A1: unusable area
A2: nominal sensing range
Mode of operation: rising ramp

LED Displays

Displays in dependence on operating mode	Red LED	Yellow LED
TEACH-IN evaluation limit		
Object detected	off	flashes
No object detected	flashes	off
Object uncertain (TEACH-IN invalid)	on	off
Normal mode (evaluation range)	off	on
Fault	on	previous state

5. Installation conditions

If the sensor is installed at the environment temperature fall below 0℃,It should do well on the protective measures. In case of direct mounting of the sensor in a through hole using the steel nuts, it has to be fixed at the middle of the housing thread.